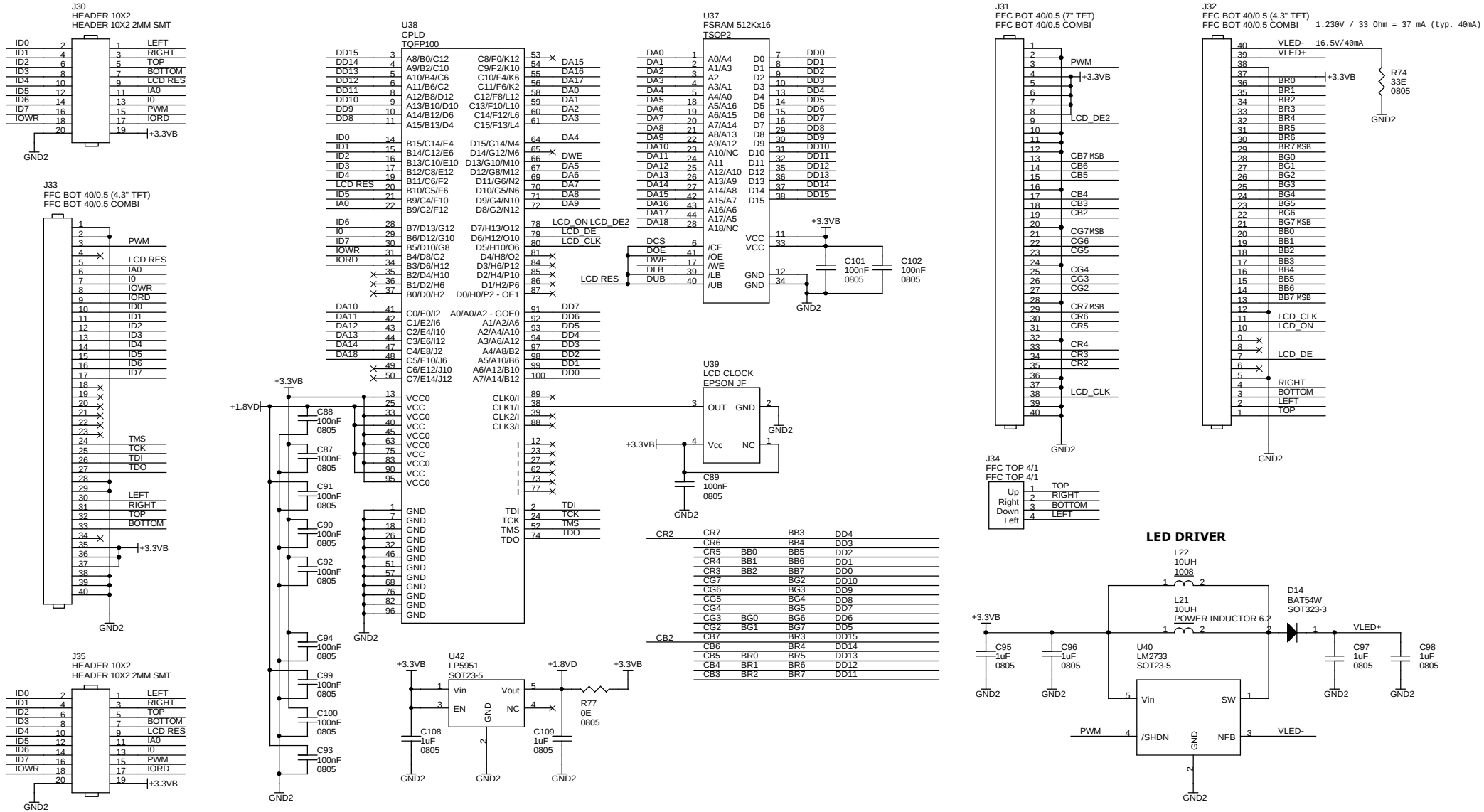
INPUT SIGNALS
LCD CONTROLLER
LCD CONNECTORS
J30
HEADER 10X2
HEADER 10X2 2MM SMT
J33
FFC BOT 40/0.5 (4.3" TFT)
FFC BOT 40/0.5 COMBI
J35
HEADER 10X2
HEADER 10X2 2MM SMT
U38
CPLD
TQFP100
U37
FSRAM 512Kx16
TSOP2
U39
LCD CLOCK
EPSON JF
U42
LP5951
SOT23-5
J31
FFC BOT 40/0.5 (7" TFT)
FFC BOT 40/0.5 COMBI
J32
FFC BOT 40/0.5 (4.3" TFT)
FFC BOT 40/0.5 COMBI
1.230V / 33 Ohm = 37 mA (typ. 40mA)
J34
FFC TOP 4/1
FFC TOP 4/1
LED DRIVER
L22
10UH
1008
L21
10UH
POWER INDUCTOR 6.2
D14
BAT54W
SOT323-3
U40
LM2733
SOT23-5
M16
FIDUCIAL 1MM TOP
M17
FIDUCIAL 1MM TOP
M18
FIDUCIAL 1MM TOP
M19
FIDUCIAL 1MM TOP
X-GRAPH (a DELCOMp trademark)
Technologielaan 3
B-3001 Leuven
XG4900
Size
A3
CAGE Code
DWG NO
XG4900-R2
Rev
1
Thursday, October 20, 2011
Scale
Sheet
2 of 2